ETA-USA
Your power supply experts

4.6~28.8 WATT NON-ISOLATED DC-DC CONVERTER

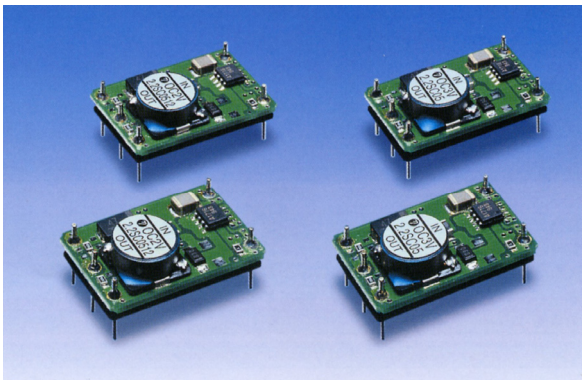

OC1V –SC2448

Specifications<DC/DC>	Model											
OC1**SC2448 SINGLE	OC1-3.3SC2448		OC1-05SC2448		OC1-06SC2448		OC1-09SC2448		OC1-12SC2448		OC1-15SC2448	
Input Characteristic												
Input Voltage DC[V]	24	48	24	48	24	48	24	48	24	48	24	48
Input Range DC[V]	20.4 to 56											
Inrush Current [A]	Not specified											
Input Range												
at no load [mA](typical)	4	5	2	2	2	2	3	2	4	4	6	4
at full load[mA](typical)	260	139	355	187	416	218	596	312	714	369	806	416
Input Current when Remote controll is off	0.39	0.9	0.42	0.93	0.42	0.92	0.37	0.9	0.34	1.47	0.2	1.5
Line Back Noise [mVp-p](typical)	1	1	1	1.3	1.2	1.3	1.5	2	1.5	2.0	1.5	2.5
Efficiency [%] (typical) *1	74	69	81	78	84	80	88	85	91	88	93	90

Block Diagram

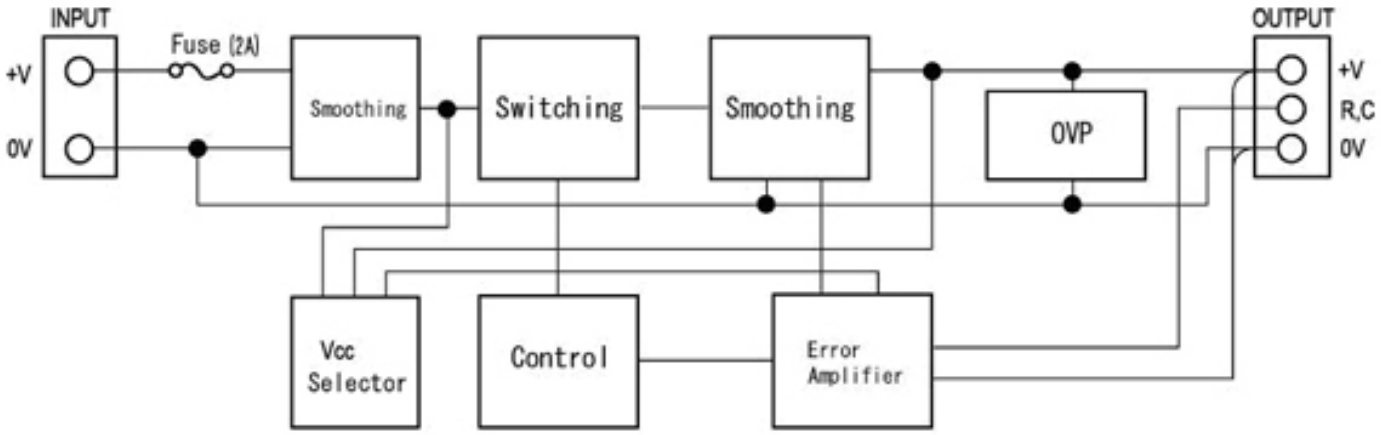

ETA-USA Tel: 408-778-2793 **Fax**: 408-779-2753 **e-mail**: sales@eta-usa.com

Specifications<DC/DC>	Model					
OC1**SC2448 SINGLE	OC1-3.3SC2448	OC1-05SC2448	OC1-06SC2448	OC1-09SC2448	OC1-12SC2448	OC1-15SC2448
Output Voltage [V]	3.3	5	6	9	12	24
Output Current [A]	1.4	1.4	1.4	1.4	1.3	1.2
Voltage Tolerance +/-[mV](maximum)	100	150	180	270	360	450
Ripple and Noise [mVp-p](maximum) *2	200					
Regulation						
a.Static Line Regulation [mV](maximum)	18	25	30	45	60	75
b.Dynamic Line Regulation +/-[mV](maximum) *3	500	600	600	600	1000	1000
c.Static Load Regulation +/-[mV](maximum) *4	18	25	30	45	60	75
d.Temperature Coefficient *5	0.03%/℃(maximum)					
e.Drift[mV](maximum) *6	30	40	45	60	75	90
f.Dynamic Load Regulation +/- [mV](maximum) *7	200					
g.Recovery Time *3,*7	5mS(typical)					
Rise up time	5mS(maximum) at rated input/output					
Hold up time	Not specified					
Functions						
Overcurrent Protection	Current Limiting with automatic recovery					
≧10% of Rated Output Current [A]	1.54	1.54	1.54	1.54	1.43	1.32
Overvoltage Protection	6	6	7.5	12	15	18
Remote Controll	Turn on by inputing voltage(4.5 to 56V) between "RC"pin and "0V"pin .Put a 5k ohm resistor between "+ in"pin and "RC"pin when remote on/off is not used					
Remote Sence	Not available					
Trimming of output voltage[mV]	Not available					
Input Fuse	Installed[2A]					
Environmental						
Operating Temperature	-20 to +71℃					
(derating)	2%/℃(50℃to 71℃) (out of warranty≧71℃)					
Operating Humidity	20-90%/RH(non-condensing)					
Storage Temperature	-20 to +85℃					
Storage Humidity	20 to 90%/RH(non-condensing)					
Vibration	5-10Hz:10mm double amplitude,10-55Hz:2G,3minutes' period for 30minutes each along X,Y,Z axes(non-operating)					
Shock	30G					
Cooling	Convection					
Weight (typical)	open board type:8g					

Conditions:

*1 at 25℃and rated input/output

*2 measured by a bayonet probe at the output connector at a 0 to 100MHz bandwidth

*3 when input voltage changed from 20.4V to 56V rapidly at rated output

*4 when output current changed from 0mA to rated current keeping the current of other channel below minimum rated current at rated input

*5 at -20 to +71℃

*6 for 7hours from 1hour after switch-on at 25℃and rated input/output

*7 when output current changed from 25% of rated current to 75% rapidly at rated input

ETA-USA Tel: 408-778-2793 **Fax**: 408-779-2753 **e-mail**: sales@eta-usa.com

Dimension Diagram

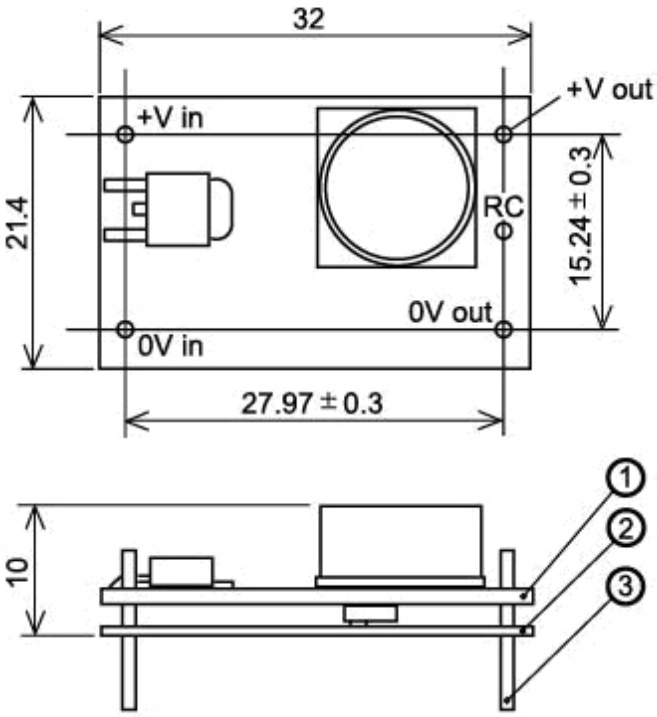

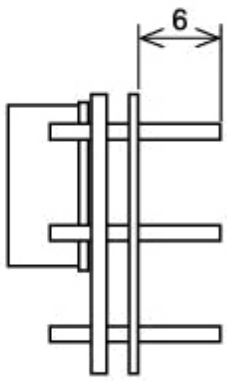

Turn on by inputting voltage (4.5 to 56V) between "RC"pin and "0V"pin .Put a 5k ohm resistor between "+ in"pin and "RC"pin when remote on/off is not used

① Double-sided PCB FR4t=1.0

② t=0.5 Insulator UL94V0

③ 1.0DIA PIN Material:BsB 2700 1/2H

Solder Plating

*Tolerance ±0.5

ETA-USA Tel: 408-778-2793 **Fax**: 408-779-2753 **e-mail**: sales@eta-usa.com

Efficiency Curve

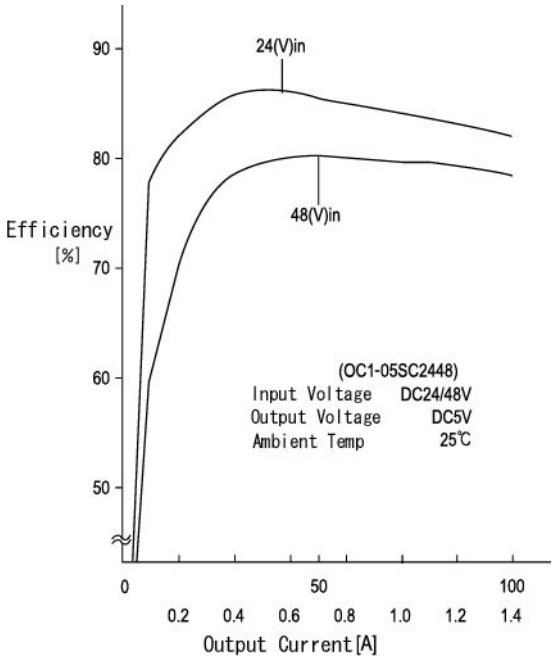

OCP Curve

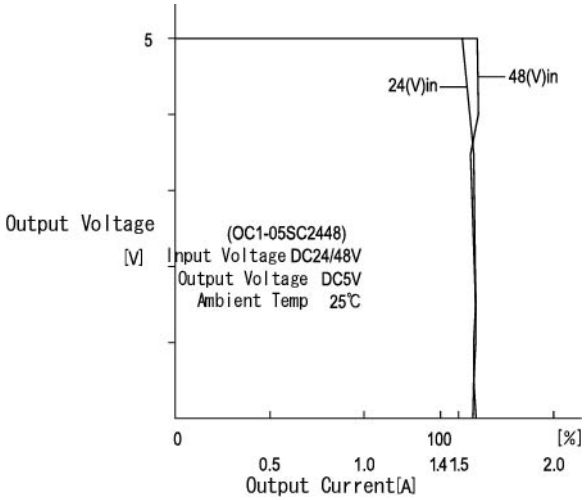

ETA-USA Tel: 408-778-2793 **Fax**: 408-779-2753 **e-mail**: sales@eta-usa.com